HomeTreats

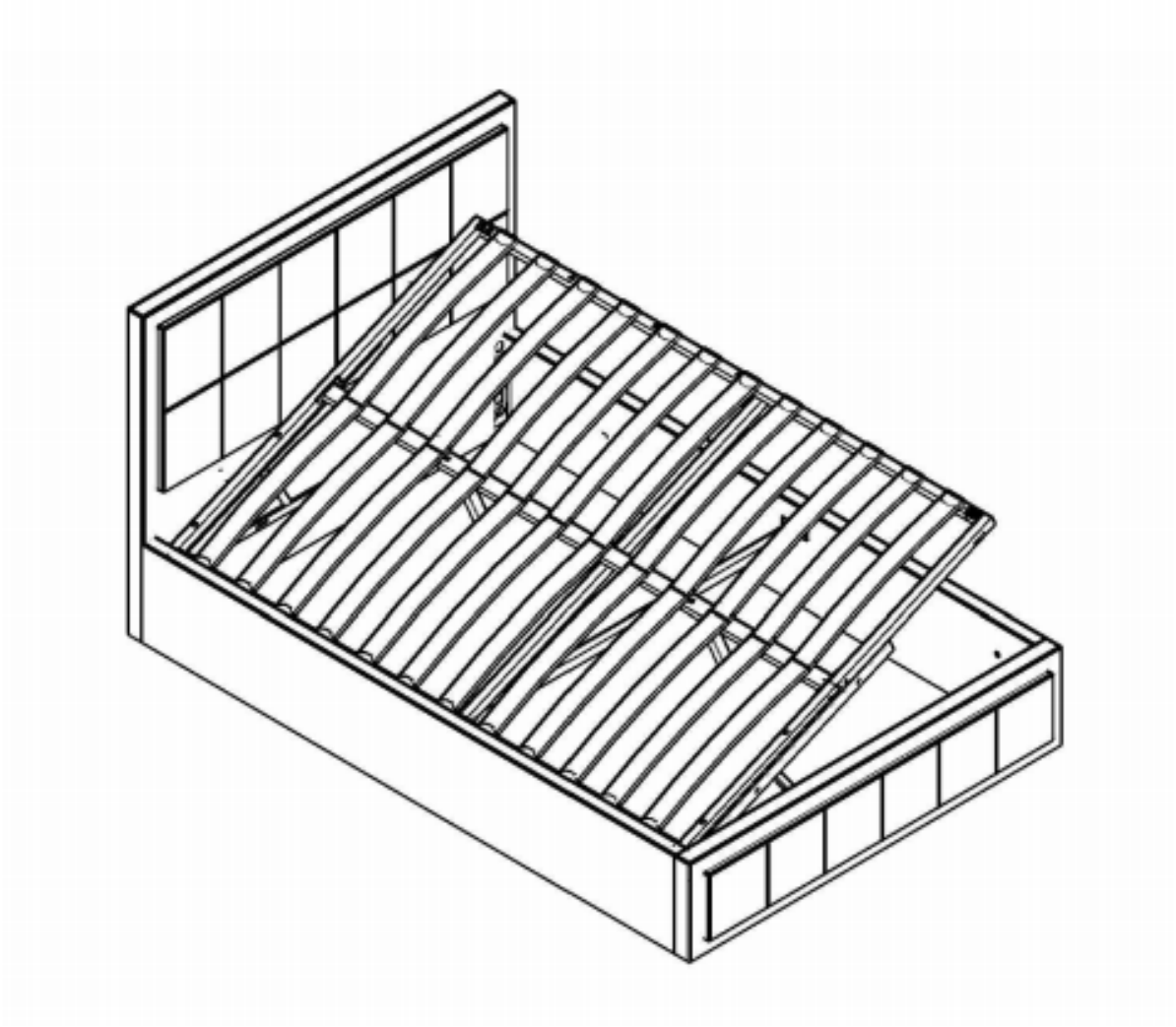

Production Ref: L001

Dimensions of Bed when fully Assembled:
Lenght x Width x Height (Headboard / Footboard)

KA873	4FT	Small Double	122*190*85CM
KA874	4FT6	Double	135*190*85CM
KA875	5FT	King	150*200*85CM

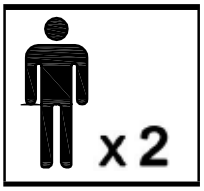

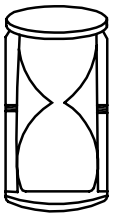

Approx
1.5 Hour
Set Up

In the unlikely event, parts are missing or damaged in transit.
Please contact the Seller on website your purchase was made.
Our customer service team will assist to arrange replacement parts to complete assembly.

PLEASE READ THE INSTRUCTIONS CAREFULLY PRIR TO ASSEMBLY.

1) Owing to the size and weight of the bed, we recommend that it is assembled by two adults, on a flat surface in a room that it is intended for.
2) Please Do Not use any tools other than those provided or recommended in these instructions.
3) Please Do Not discard any packing until you have checked that you have all the parts and fittings. keep all fittings out of reach of children.
4) Assemble all parts loosely until advised to tighten. Depending on use, it mayble necessary to tighten the fittings from time to time, So please save your Allen key and Spanner that has been provided.

WARNINGS

1) Please ensure children Do Not play in the storage area or try to lift up the metal frame.
2) Once assembled, put mattress on frame before pushing it down and only lift up or push down the metal frame with mattress on top.
3) Please Do Not stand on the storage base at any time.
4) Do Not throw away any of the packaging or the instructions booklet until you have checked all the components and fittings and the furniture is fully assembled.

HOW TO USE BED

When the bed is fully assembled, Lift the frame up using the nylon strap. To close the frame you will need to place both hands on the metal bar that is in the air and Apply pressure to close the bed. The be will only work if this done centrally. Please also note the lift arms do not move up and down on their own and only work if the bed is fully assembled and is assembled correctly and will only work normally with mattress on the frame. Depending on the weight of the mattress, the speed of the lift will vary so be careful until you get used to the speed. Always use the fabric handle to lift or lower the frame.
CAUTIOUS:-keep fingers well away from the moving parts.

PARTLIST

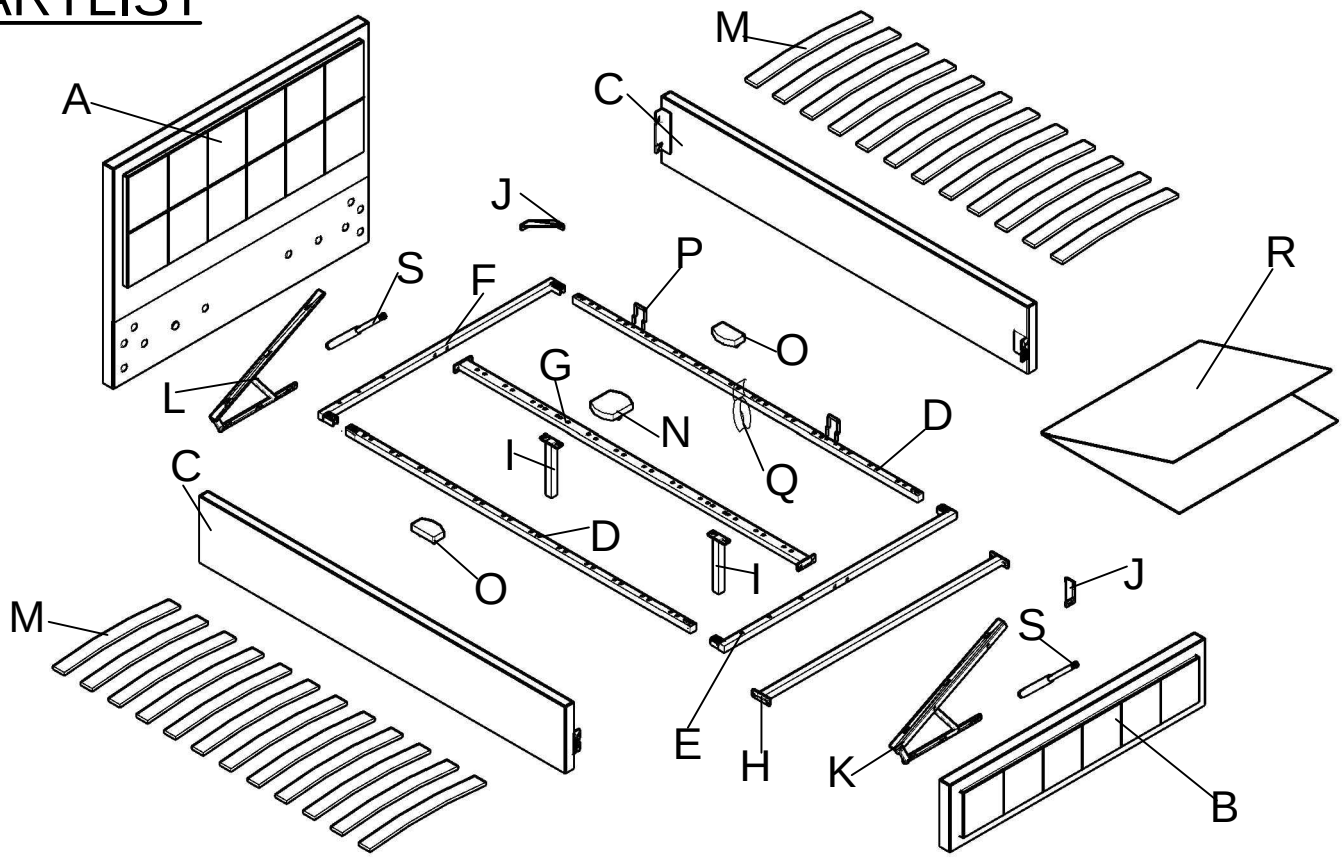

HARDWARELIST

Label	Picture	Description	Qty	Label	Picture	Description	Qty
1		Bolt M8x20	12	5	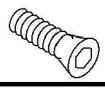	Bolt M8x20	4
2		Bolt M8x40	12	6		Nut M8	6
3		Bolt M6x16	8	7		Nut M6	8
4		Bolt M6x35	8	10		Foam Pad	7
				11		Gas liftting plastic cap	6

TOOL list

Label	Picture	Description	Qty
8		Allen key M5 M6	2
9	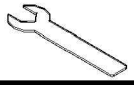	Spanner M10 M12 M13	3

In the unlikely event of assembly problems, damage in transit or missing parts please contact on the websi te the purchase was made. We can assist with replacent parts, assembly advice.

Fixing the Folding Arm Note

The fixing arm part (K & L) can be attached **LEFT** or **RIGHT** opening based on user choice & installation. To fix right side opening use position **1**. To fix left side opening use position **2**

Right side opening 1

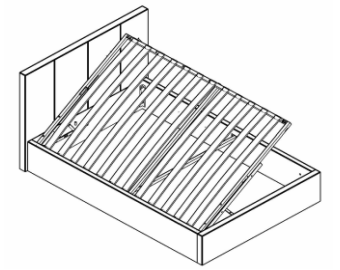

Left side opening 2

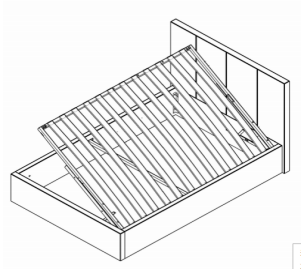

HEADBOARD

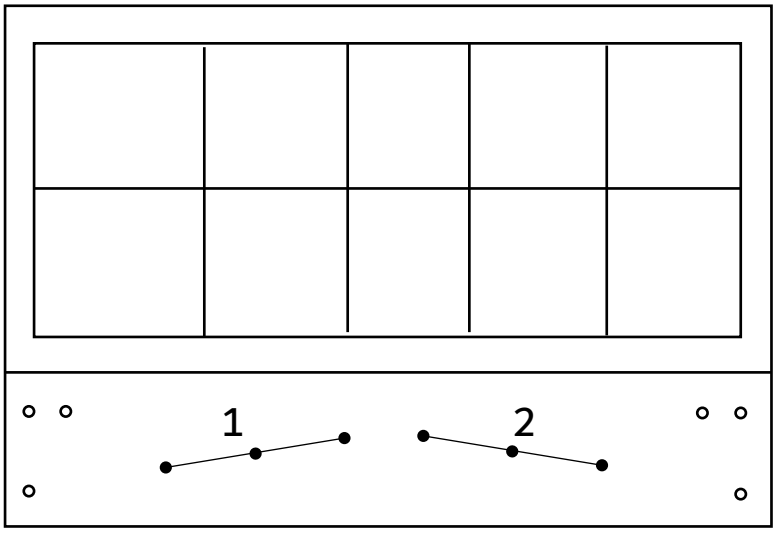

Right side opening 1

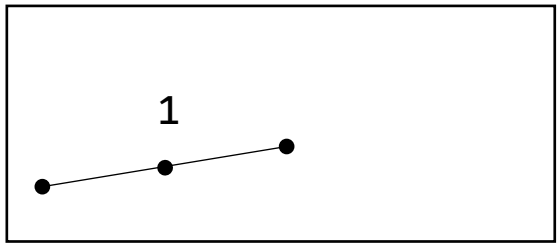

Left side opening 2

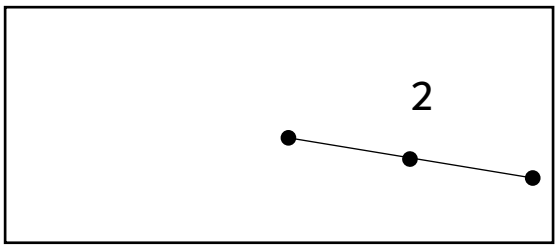

L

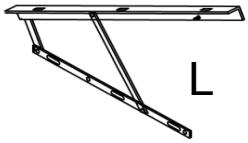

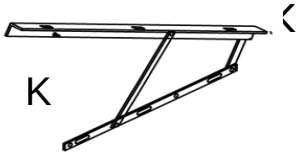

FOOTBOARD

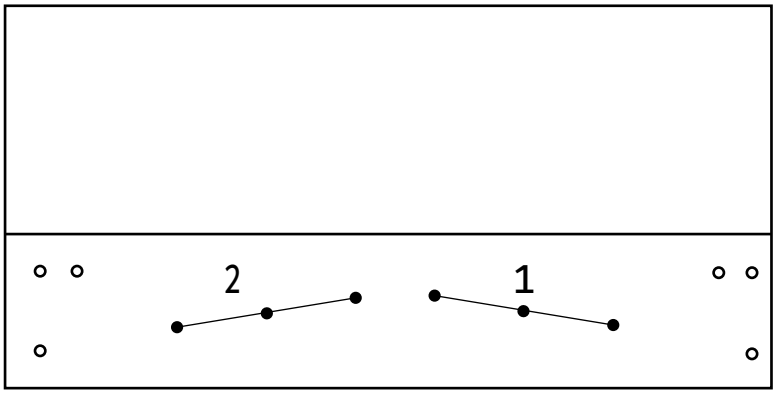

Right side opening - 1

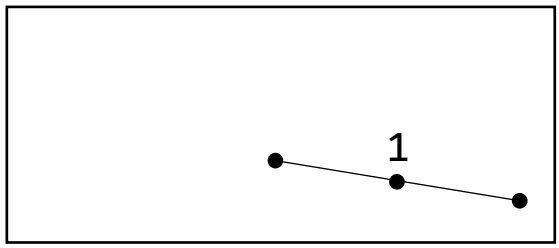

Left side opening 2

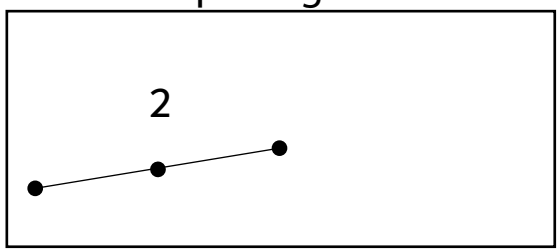

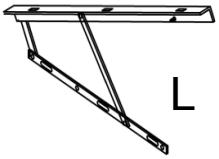

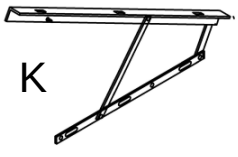

Step 1

11 3PCS Gas liftting plastic cap	2 3PCS Bolt M8x40
8 Allen key M6	

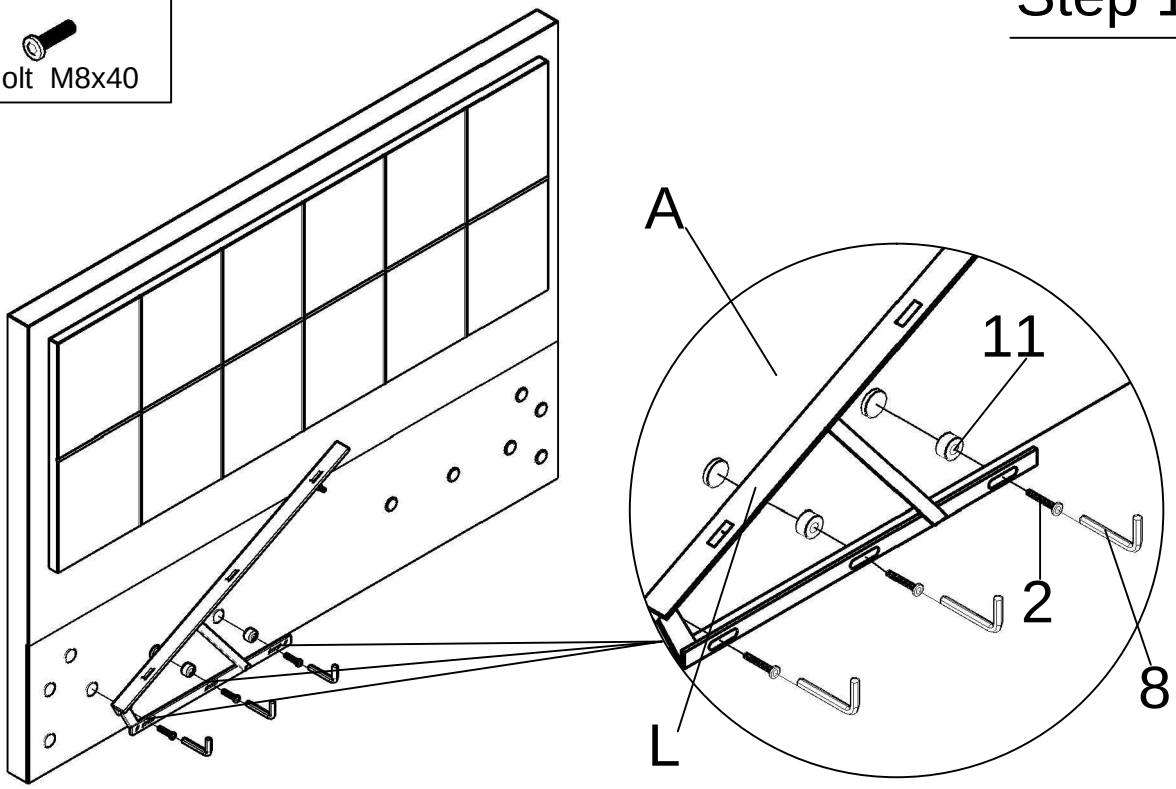

Step 2

11 3PCS Gas liftting plastic cap	2 3PCS Bolt M8x40
8 Allen key M6	

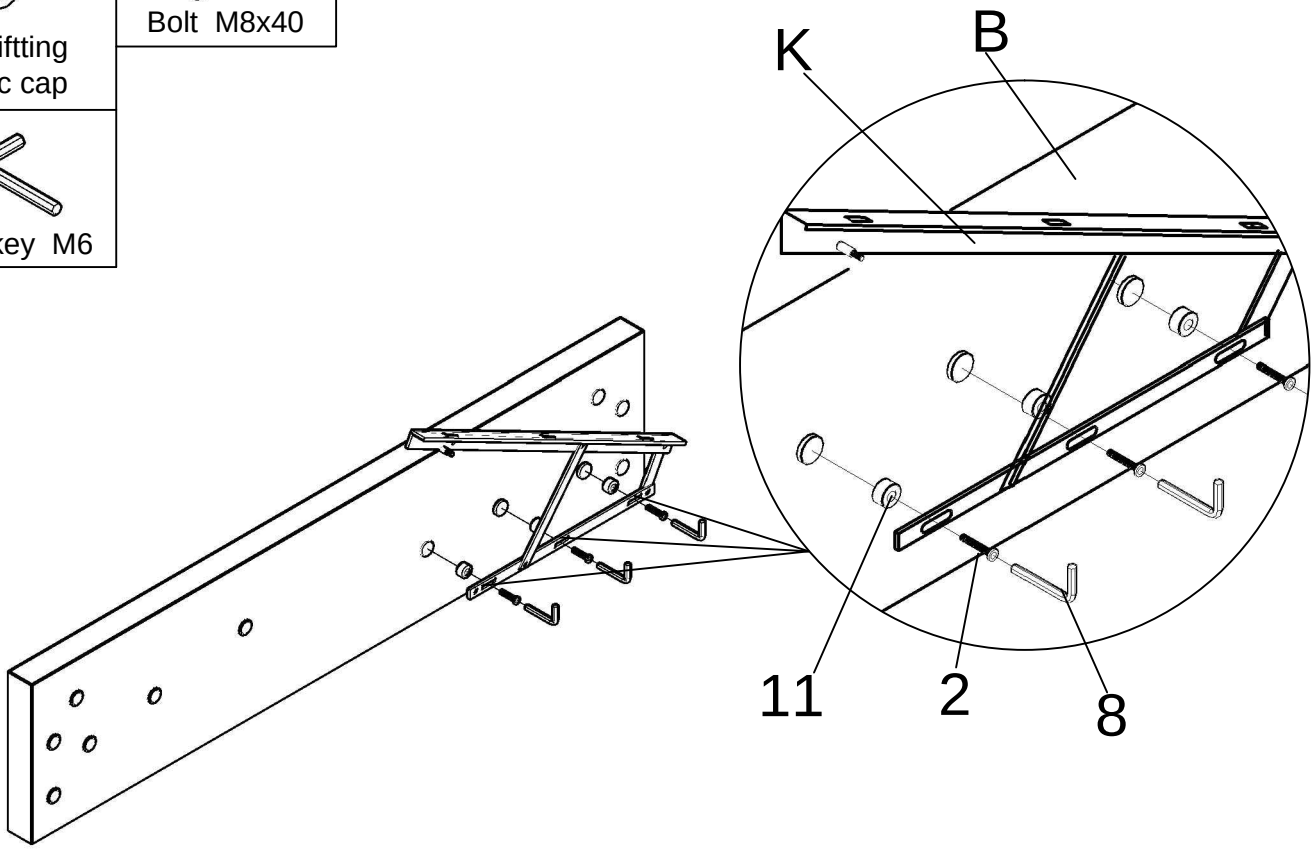

9

Spanner M13

Step 3

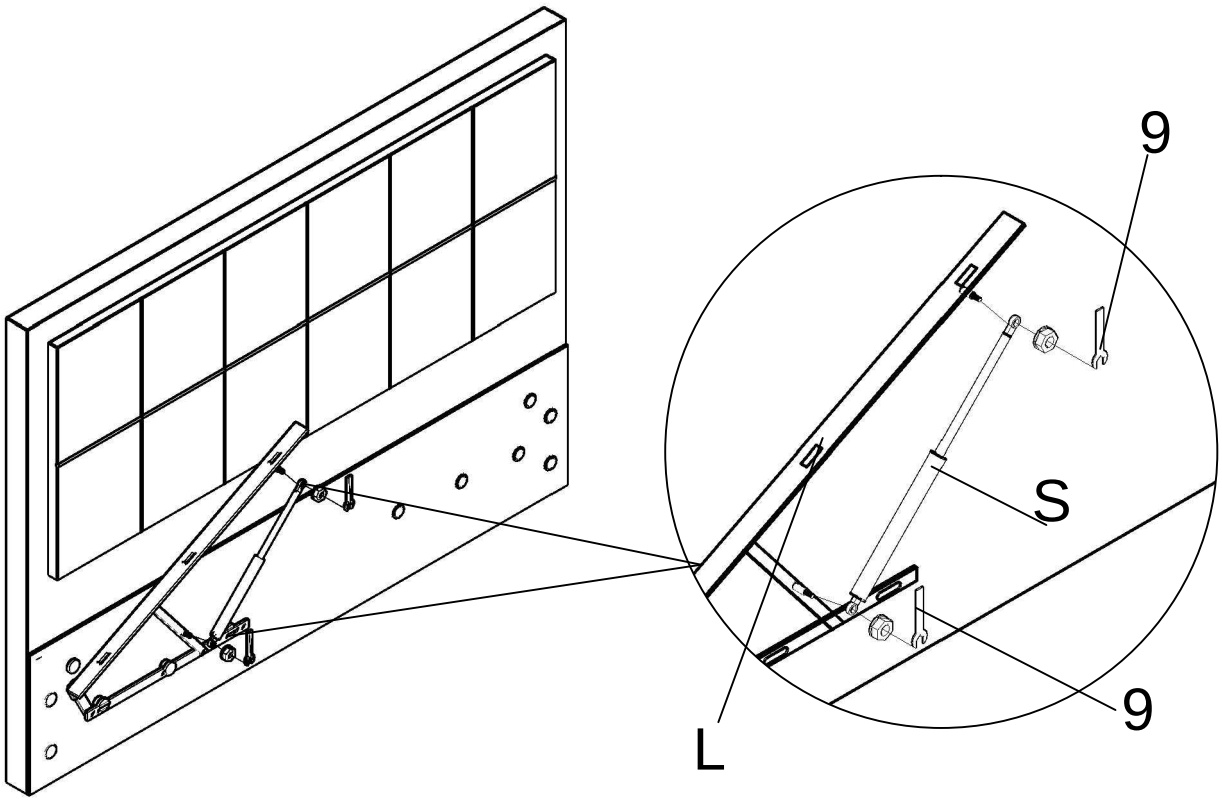

9

Spanner M13

Step 4

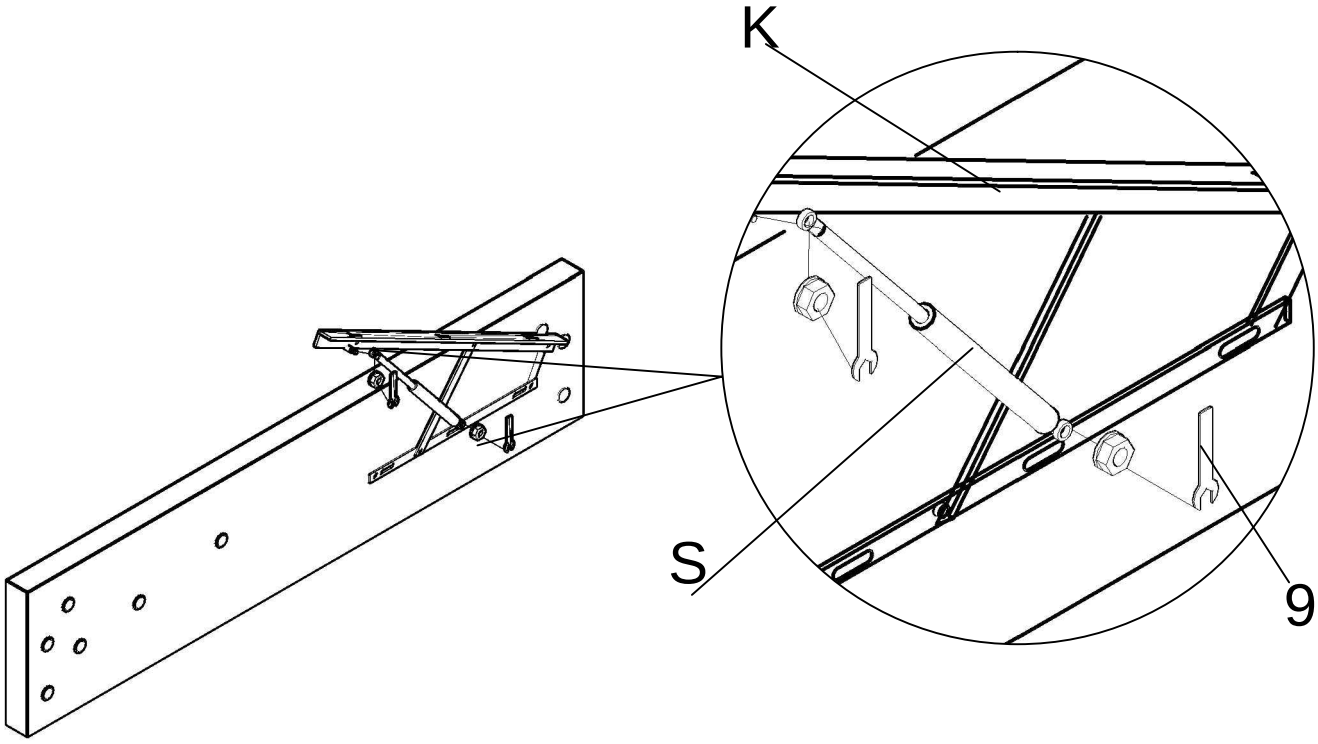

Step 5

1	8PCS
Bolt M8x20	
8	
Allen key M6	

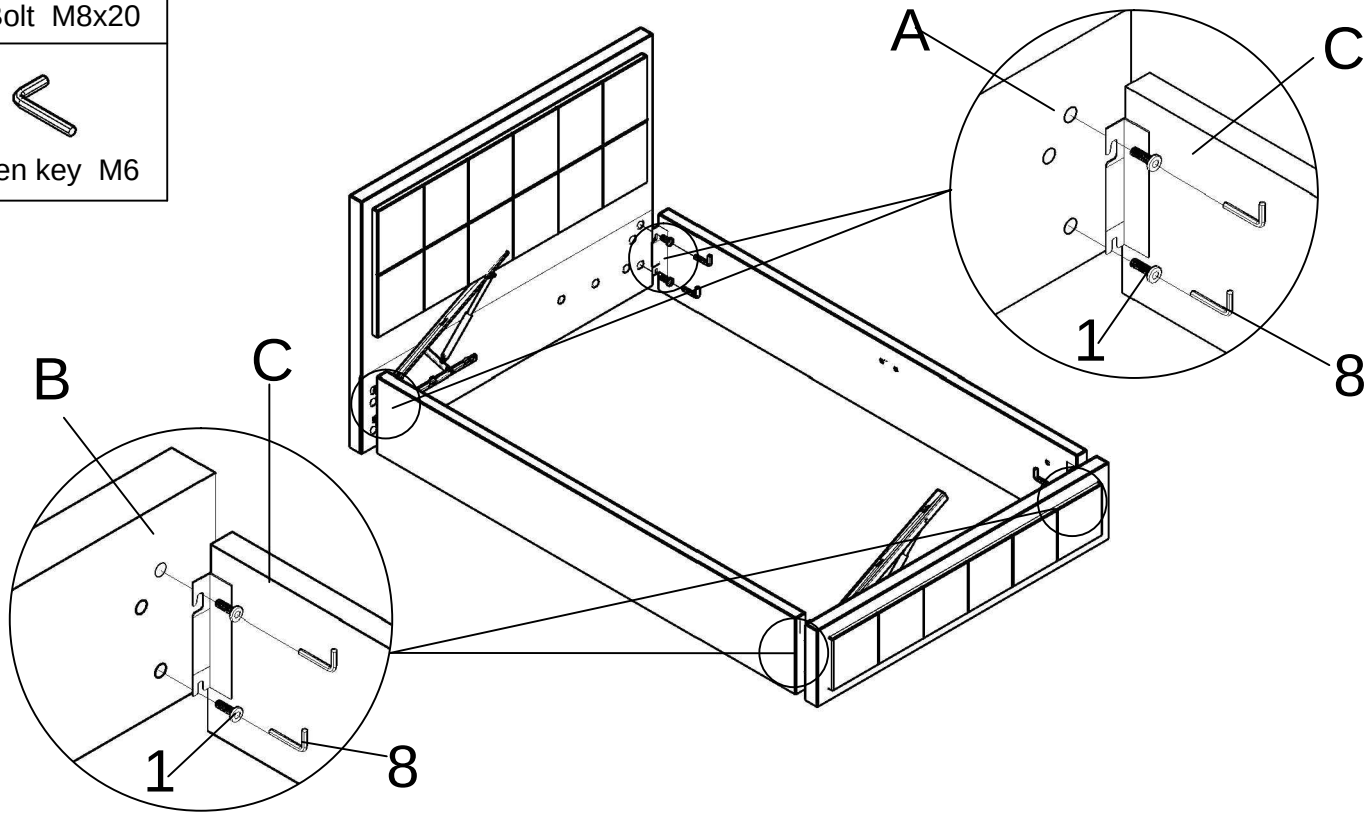

Step 6

J 2PCS	1 4PCS
Bolt M8x20	Bolt M8x20
5 4PCS	8
Bolt M8x20	Allen key M6 M5

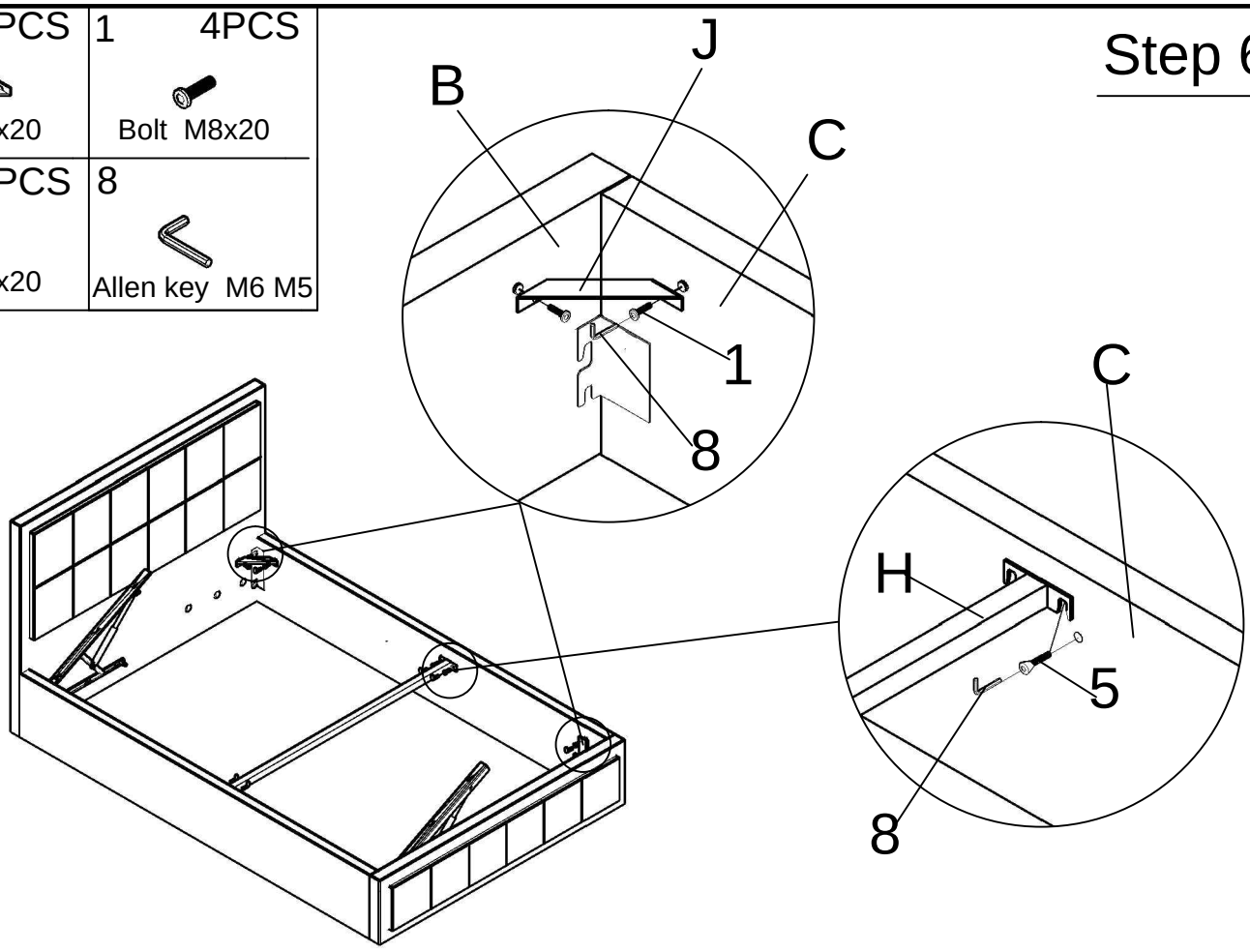

Step 7

3 8PCS Bolt M6x16	4 4PCS Bolt M6x35
7 4PCS Nut M6	8 Allen key M5
9 Spanner M10	

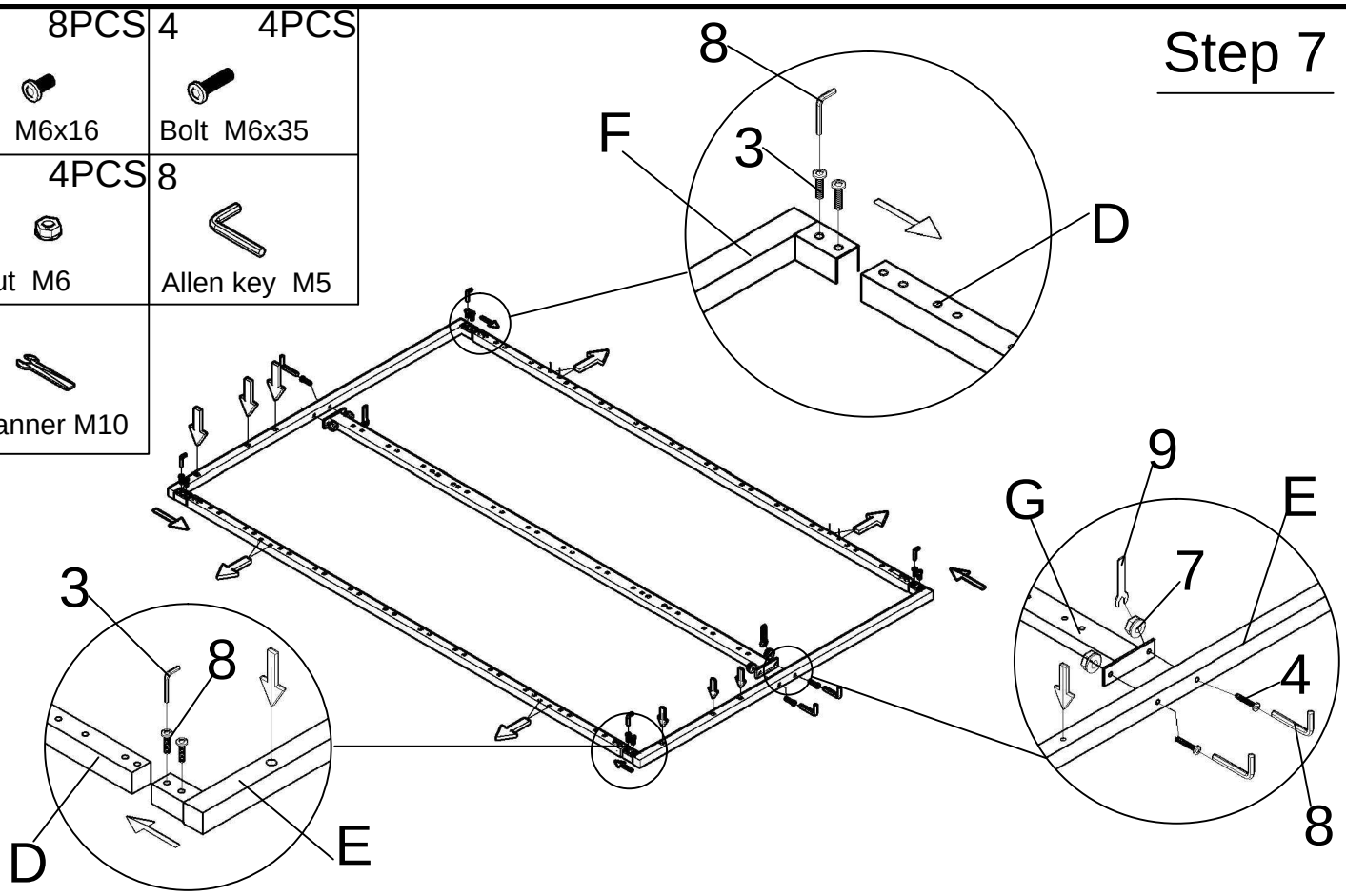

Step 8

2 6PCS Bolt M8x40	6 6PCS Nut M8
8 Allen key M6	9 Spanner M12

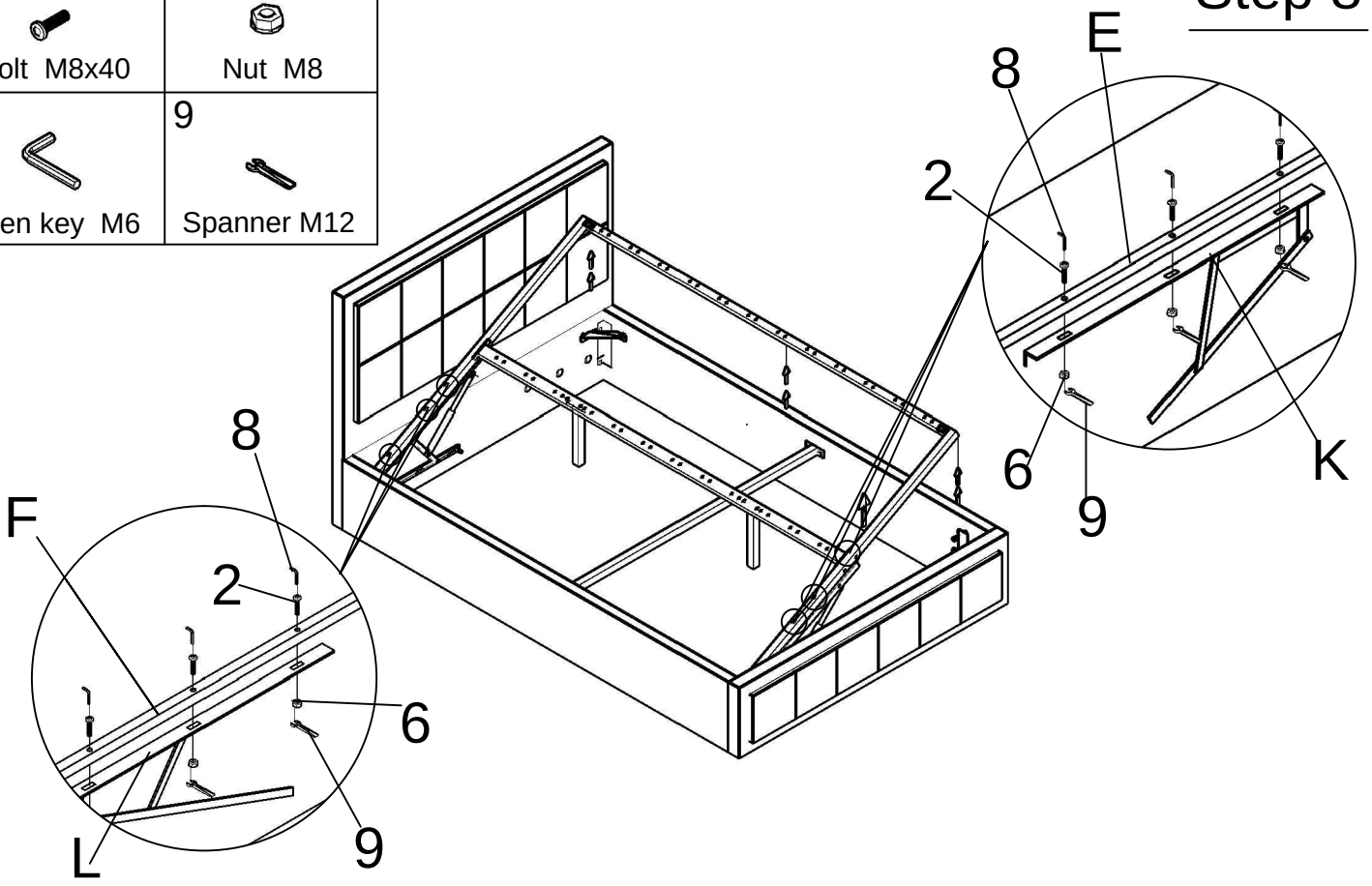

10	7PCS
Foam Pad	

Step 9

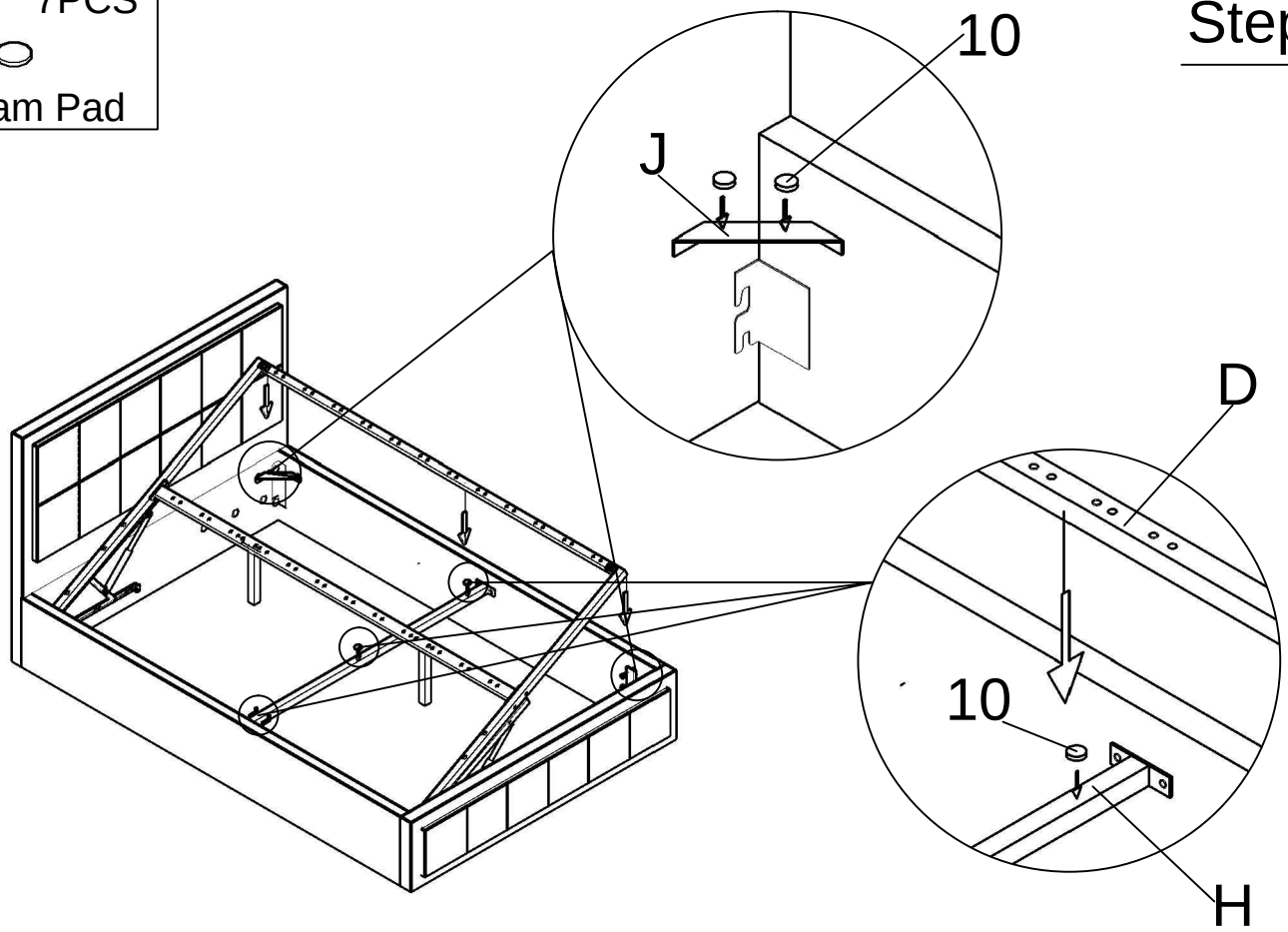

4	4PCS	7	4PCS
Bolt M6x35		Nut M6	
8		9	
Allen key M5		Spanner M10	

Step 10

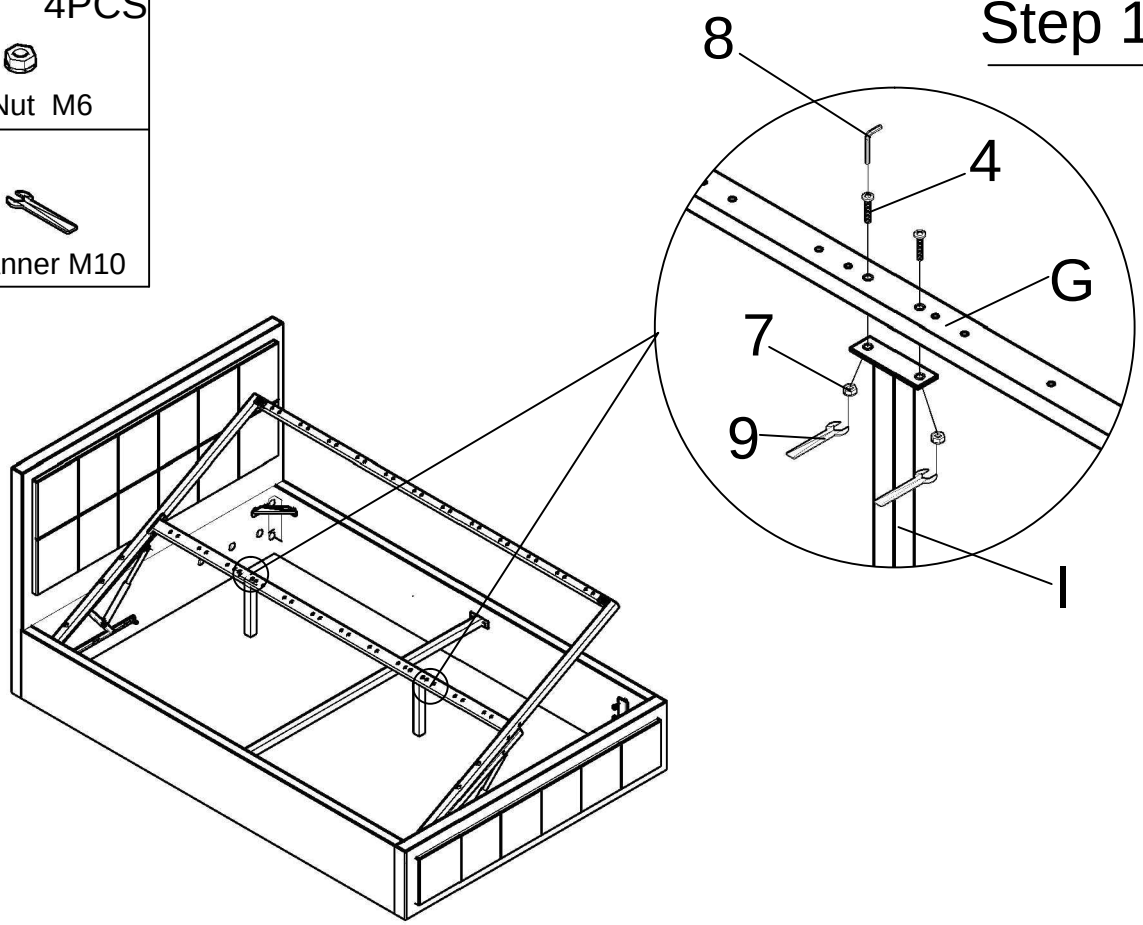

M 24PCS

Wood slat

N 12PCS

Double Plastic cap

O 24PCS

Single plastic cap

Step 11

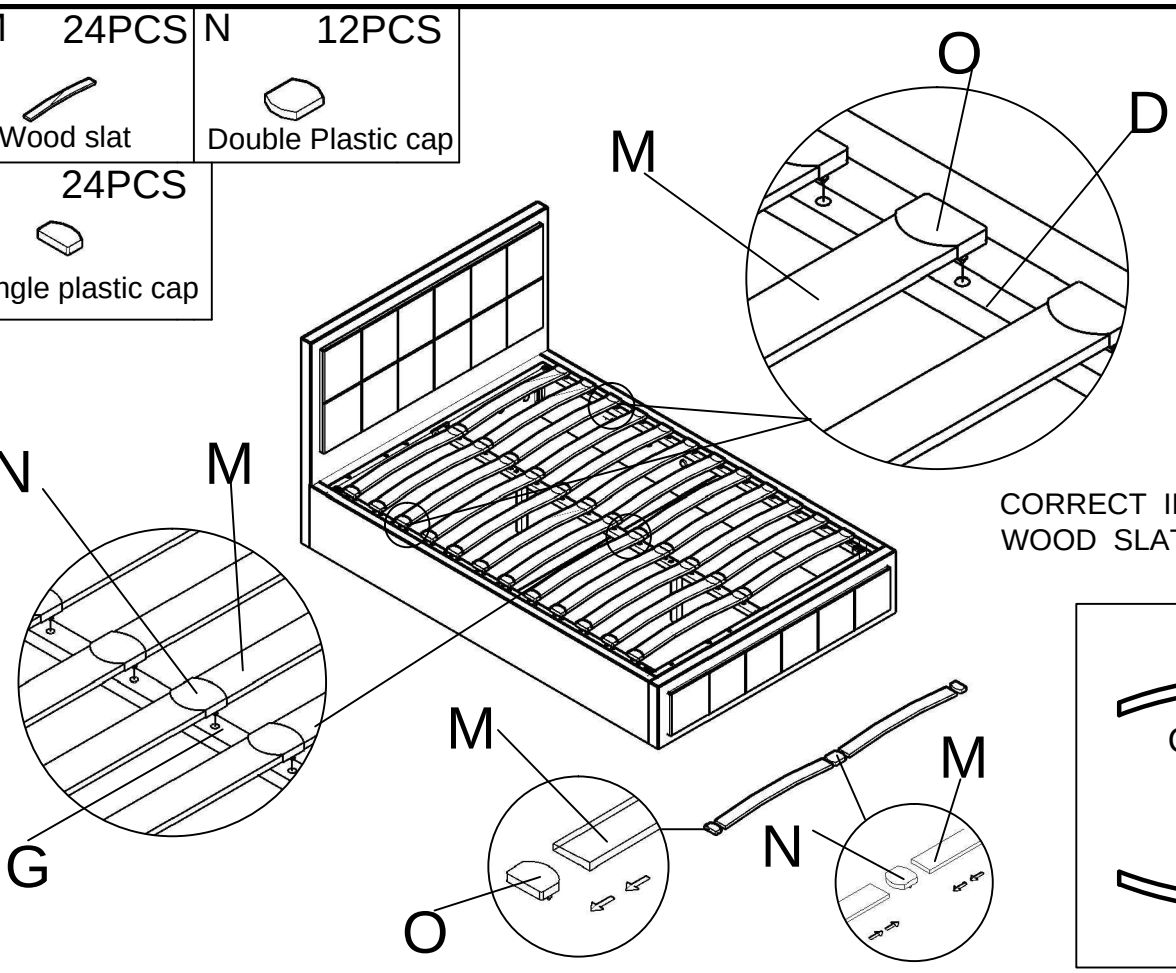

CORRECT INSTALLATION OF WOOD SLATS ON BED BASE

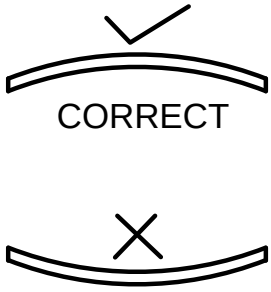

P 2PCS

Mattress stoper

Step 12

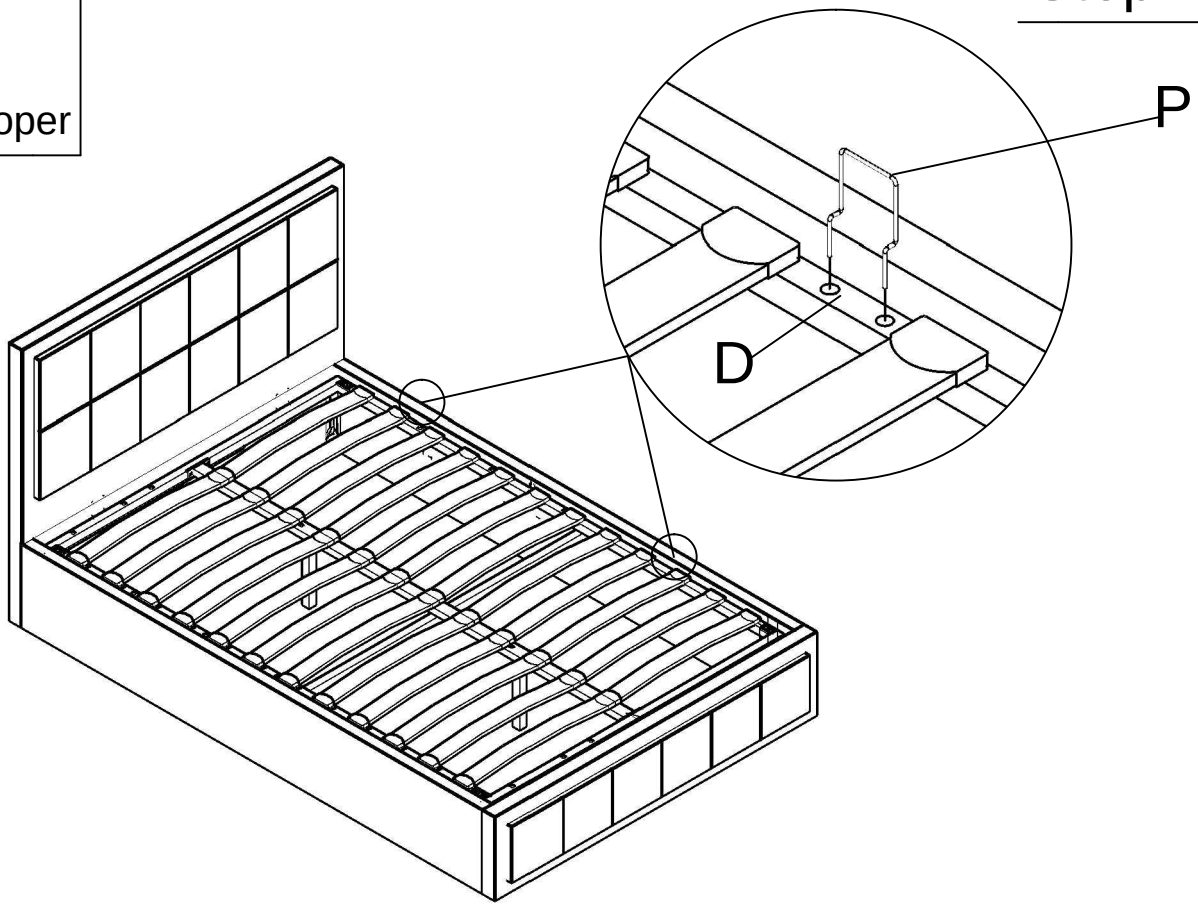

R 1PCS

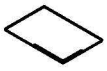

Bottom fabric

Step 13

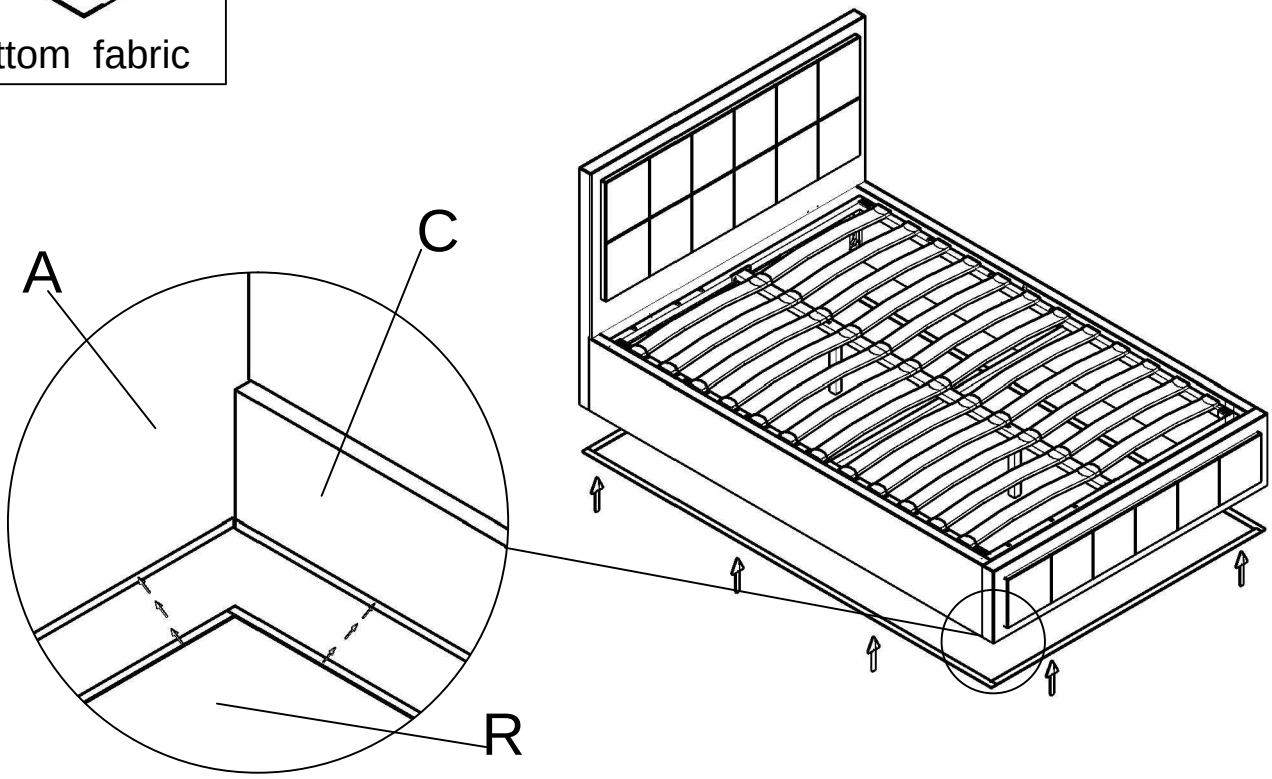

Q 1PCS

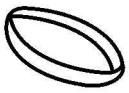

Puller

Step 14

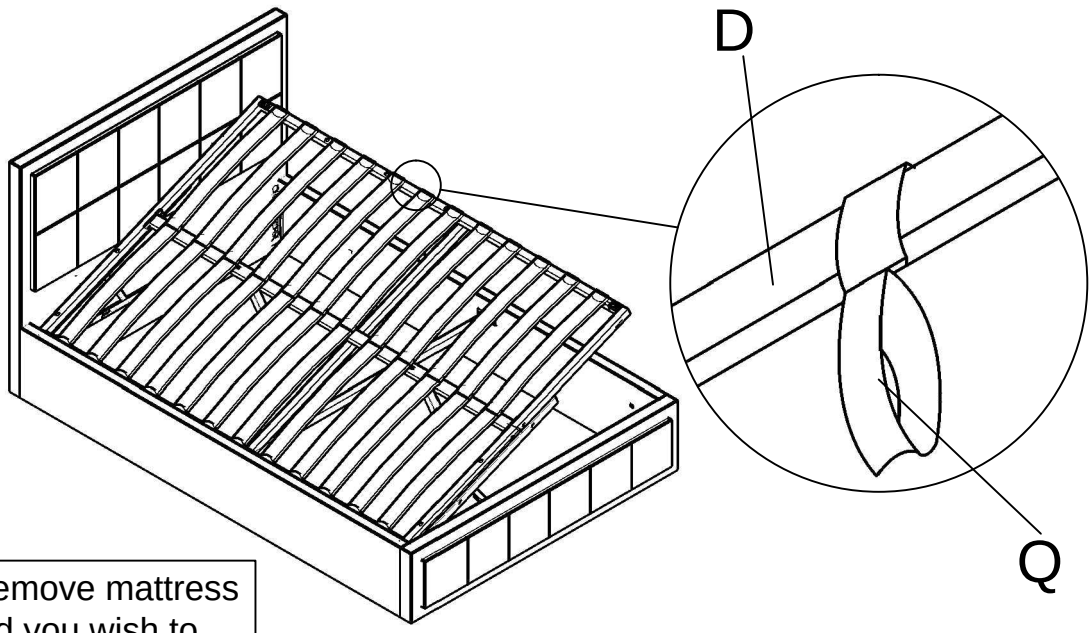

Attention: Please remove mattress from the bed should you wish to clean the floor under the bed. Dragging the bed around with mattress might compromise the bed construction , stability or cause permanent damage.

IMPORTANT INFORMATION

OTTOMAN OPERATING INSTRUCTIONS

Once your bed frame is completely assembled, the slat frame unit will not operate correctly unless a mattress is placed on the slat frame. Position the mattress onto the slat frame whilst it is in the closed position.

The pistons used in the construction of this product are extremely strong and cannot be operated by hand when not fitted to the ottoman hinges. All pistons are tested in the factory for correct pressure and operation before use.

Initially it might appear that the pistons are very stiff when opening and closing the ottoman frame, THIS IS NORMAL.

After operating the ottoman a few times, the movement of the pistons and the opening and closing of the ottoman will become easier.

PLEASE NOTE - It takes a lot of force to make the initial movement of the ottoman. **THIS IS A DESIGN FEATURE OF THE PRODUCT SO THAT IT DOES NOT FALL SHUT.** When the ottoman is almost shut, it will close completely under its own weight. The speed of closing depend on the weight of the mattress so always keep fingers clear of the frame. Periodically check and tighten bolts to ensure that the components are tight and secure.

When lowering the slat unit for the first time, take care to make sure it does not rub unevenly on the inside face of the Side Rail. If it does, the bed has been assembled slightly out of square. This can be rectified by moving the Footboard of the bed slightly to the left or right whilst leaving the headboard of the bed frame stationary.

If you are experiencing difficulty with the initial compression try fitting one piston at a time (following the Assembly Instructions) then press down on the side of the frame with the piston fitted - this acts like a big lever (The weight of the mattress can be used to supplement the load exerted). Effectively you are doubling the amount of force applied, because you have halved the resistance offered by the pistons. It can take slightly more effort than you might feel comfortable applying to the bed frame at first.

WARNING

For the safety of yourselves and others, please ensure that:

- **Children and pets are not left unattended when the frame is in the lifted position as they could become trapped inside the ottoman space.**
- **Please keep children and pets away from the ottoman bedstead whilst opening and closing the slat frame to avoid injury.**
- **The items store under the bed - i.e. the top of an item must not touch the underside of the mattress metal frame base or it may get damaged.**

IMPORTANT INFORMATION

The pistons used in the construction of this product are extremely strong and cannot be operated by hand when not fitted to the ottoman hinges. All pistons are tested in the factory for correct pressure and operation before use.

Initially it might appear that the pistons are very stiff when opening and closing the ottoman frame, THIS IS NORMAL.

After operating the ottoman a few times, the movement of the pistons and the opening and closing of the ottoman will become easier.

PLEASE NOTE - It takes a lot of force to make the initial movement of the ottoman. **THIS IS A DESIGN FEATURE OF THE PRODUCT SO THAT IT DOES NOT FALL SHUT.** When the ottoman is almost shut, it will close completely under its own weight. The speed of closing depend on the weight of the mattress so always keep fingers clear of the frame.

Periodically check and tighten bolts to ensure that the components are tight and secure.

When lowering the slat unit for the first time, take care to make sure it does not rub unevenly on the inside face of the Side Rail. If it does, the bed has been assembled slightly out of square. This can be rectified by moving the Footboard of the bed slightly to the left or right whilst leaving the headboard of the bed frame stationary.

If you are experiencing difficulty with the initial compression try fitting one piston at a time (following the Assembly Instructions) then press down on the side of the frame with the piston fitted - this acts like a big lever (The weight of the mattress can be used to supplement the load exerted). Effectively you are doubling the amount of force applied, because you have halved the resistance offered by the pistons. It can take slightly more effort than you might feel comfortable applying to the bed frame at first.

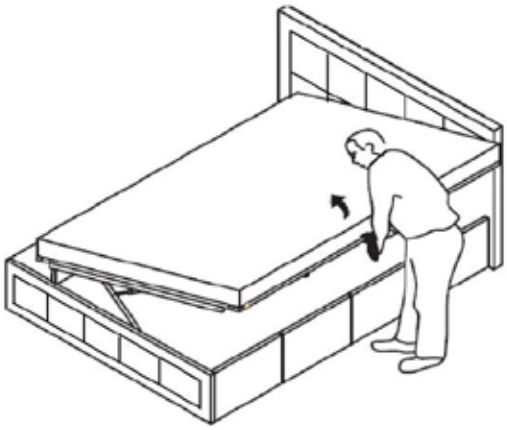

To operate the ottoman, always use 2 hands at arm's length.You must ensure the mattress is on the bed frame before lifting the mechanism. **Failure to do so may result in injury.**

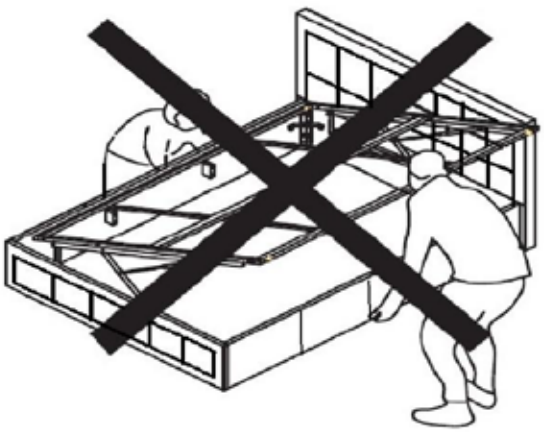

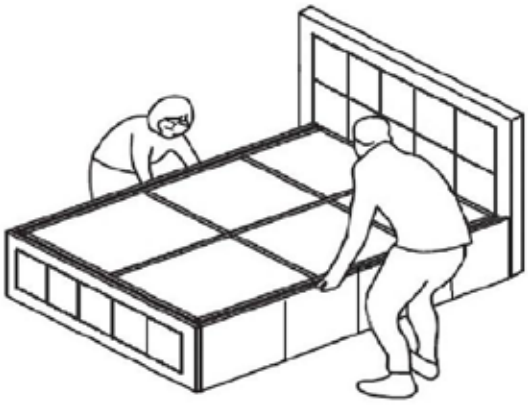

Do not attempt to move the bed whilst the frame is opened in the upright positon.

ATTENTION
Important Notes
Regarding Gas Lifts

This information applies to all types of gas lift storage, regardless of the base top: boarded base ❶ or wooden slats ❷ and regardless of opening configuration: end opening ❶ / side opening ❷

NEVER OPEN OR CLOSE WITHOUT A MATTRESS ON TOP OR YOU RISK TWISTING THE FRAME, DAMAGING THE BED OR PERSONAL INJURY!

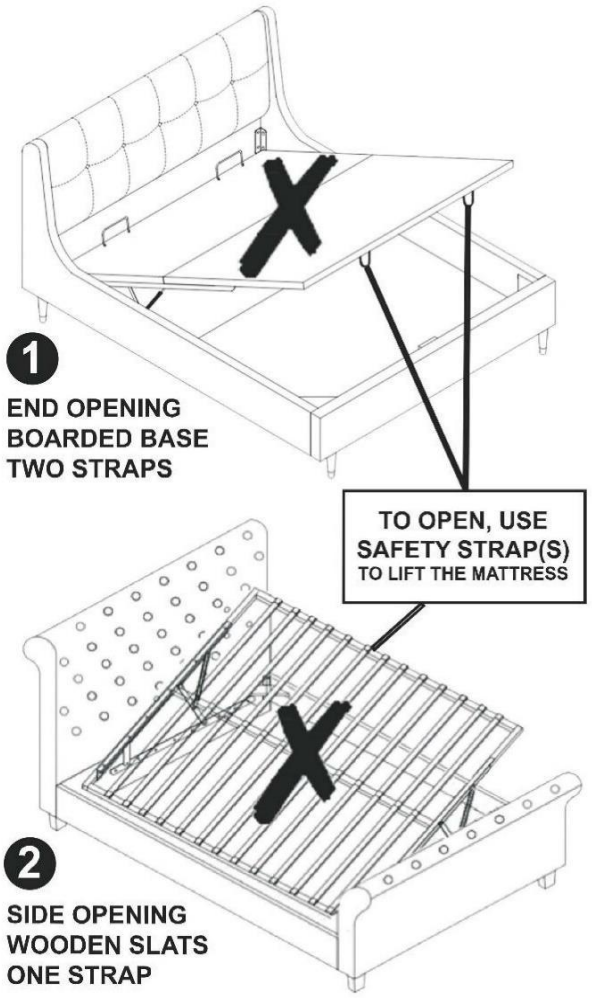

❸ **ONCE THE MATTRESS IS ON TOP, YOU CAN OPEN & CLOSE THE BED SAFELY** ✓

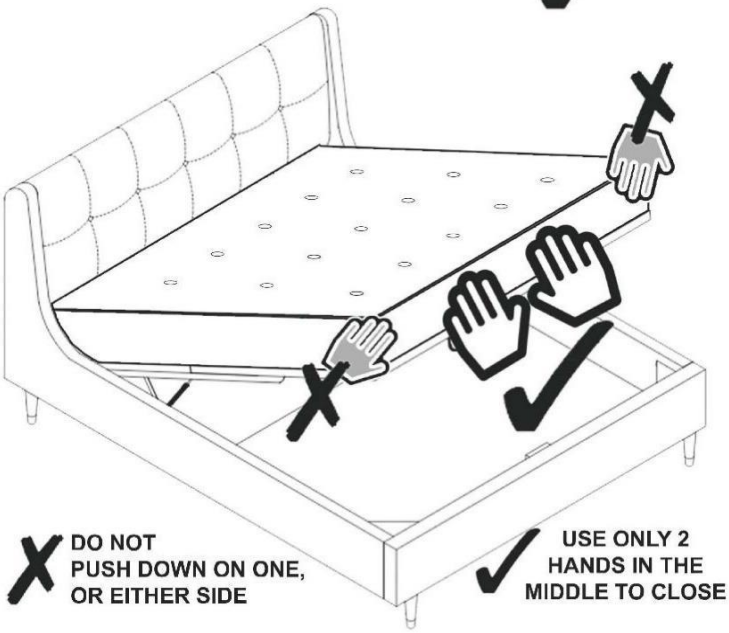

Once all the nuts and bolts are tightened firmly, the first time you close the lifting mechanism, push down with extra pressure to force open the seals on the pistons.

This will feel like a lot of pressure, so be firm and it will close!

1. **NEVER operate without a mattress on top. Failure to do so will damage the bed.**
2. **Close by pushing down firmly, with both hands towards the centre, with equal pressure.**
3. **NEVER push down on only one side or edge, or you will damage your bed.**
4. **NEVER sleep on the bed frame without a mattress.**
5. **Please remember to re-tighten all nuts & bolts within the bed frame after 2 weeks of use.**

Hints and Tips

Failure to do so may result in injury.

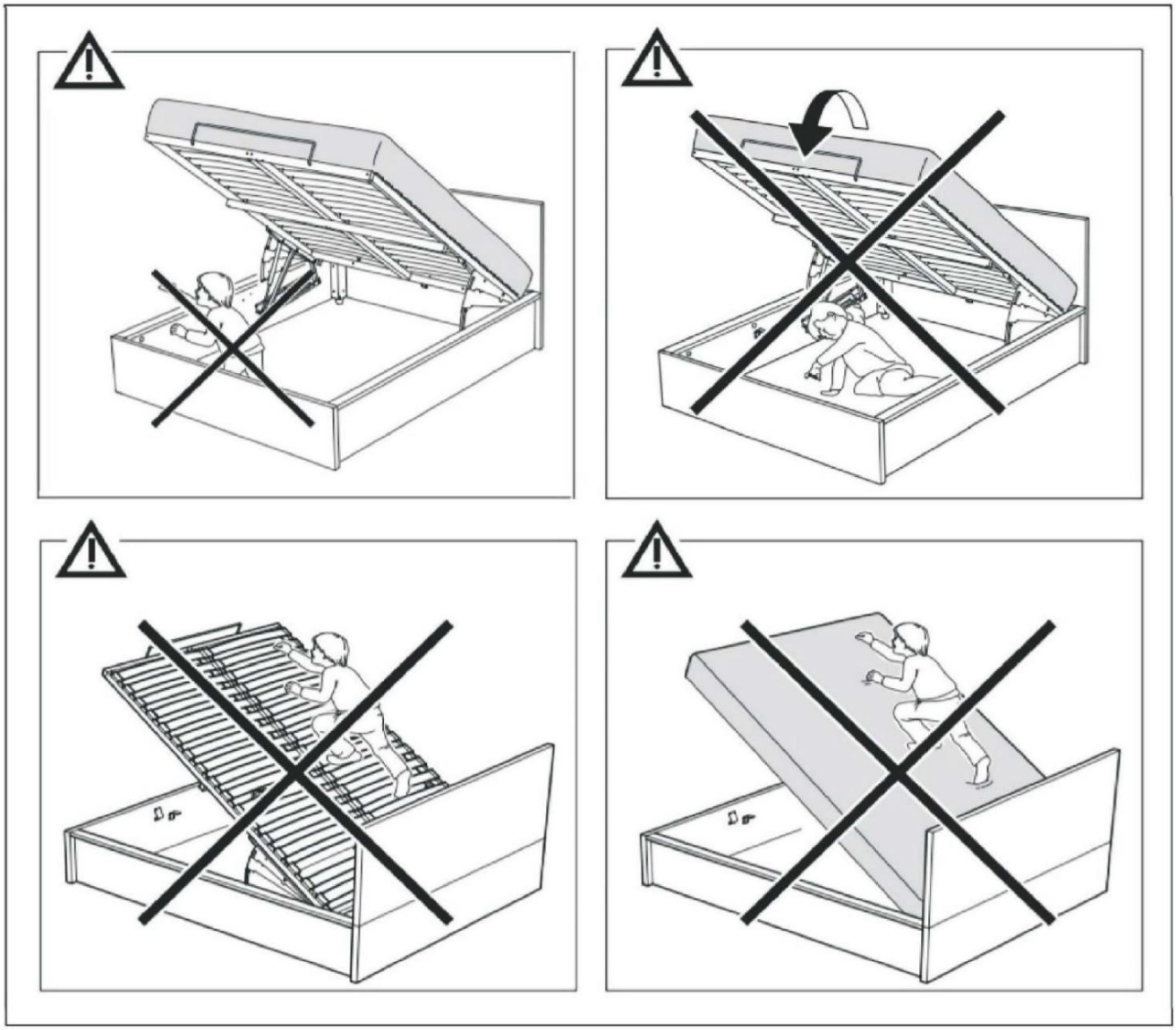

Bed frame must be in CLOSED position when moving the bed.

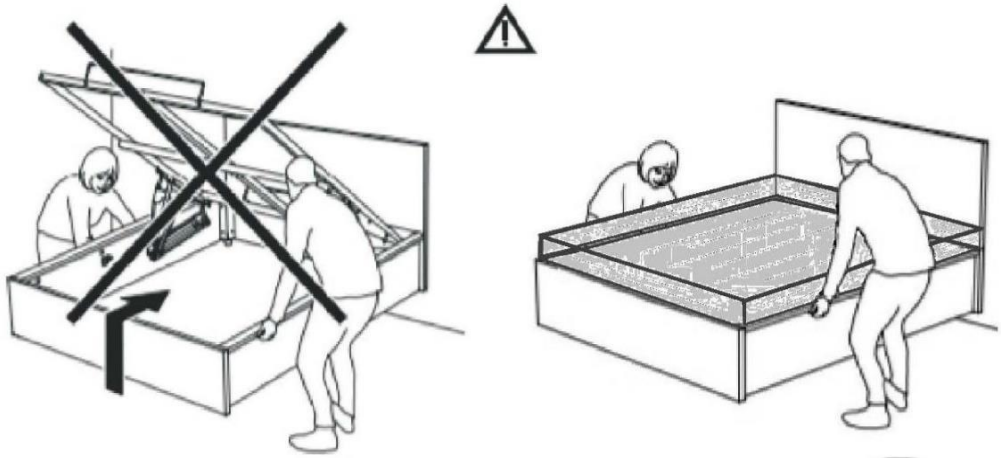

Thank you for your purchase, we hope you enjoy your product. If so please do leave a 5 star feedback on Home Treats Trust Pilot page. ★★★★★

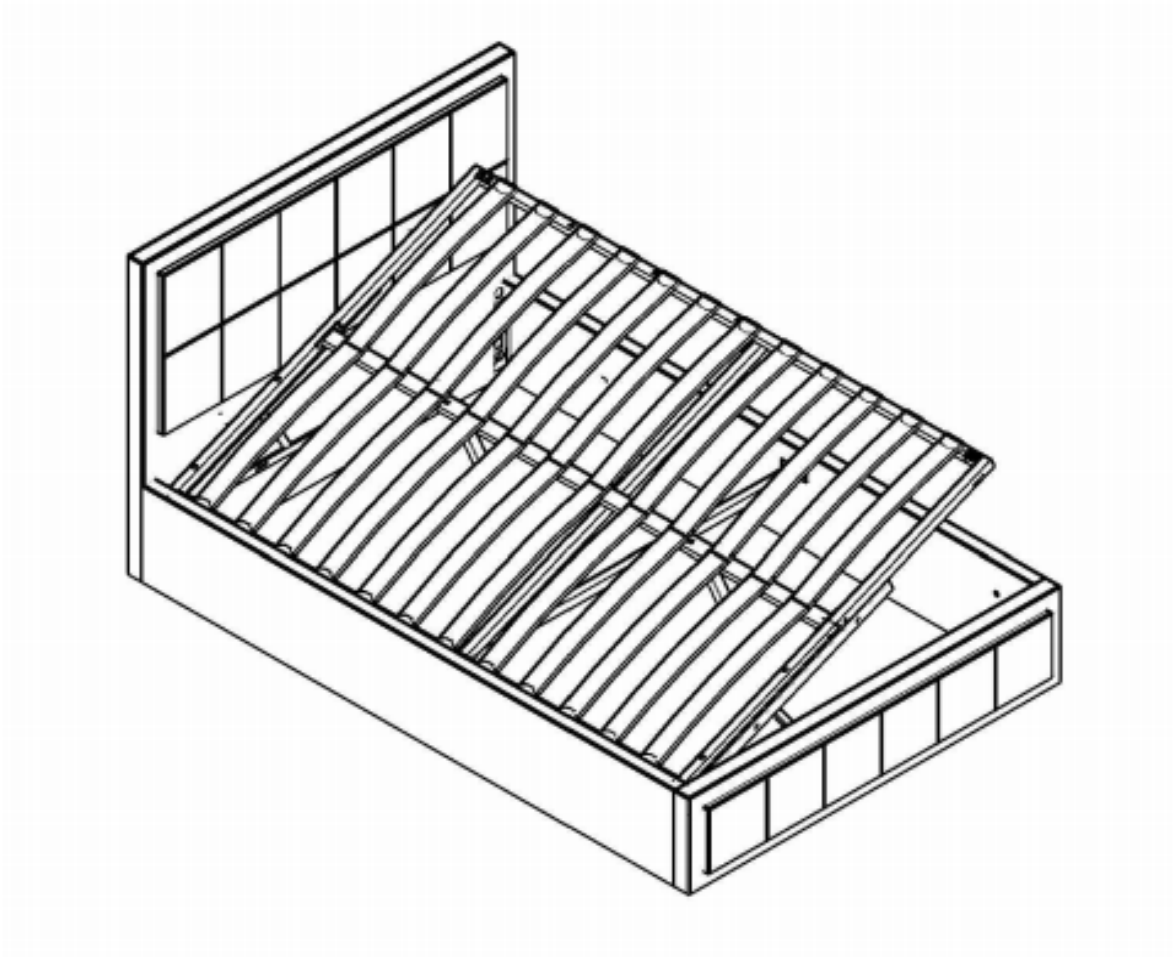

HomeTreats

In the unlikely event of a problem please contact our customer service from the purchase website, we are on hand to help solve the issue in a matter of hours.
hometreatsuk.com Email: **service@hometreatsuk.com** Phone: **0161 250 9393**

HomeTreats

<---Activate your extended product warranty. Please scan the code or register at https://hometreatsuk.com/warranty/

Made in China for Doodle Products Ltd, OL10 2TR Production Ref: L001